Technical sheet :

MRT 3060

VISION +

MANITOU
HANDLING YOUR WORLD

Capacities		Imperial
Max. capacity		13228 lb
Max. lifting height		98 ft 1 in
Max. outreach		85 ft
Weight and dimensions		
Overall length (with forks)	l1	30 ft
Length to face of forks	l2	26 ft 1 in
Overall width	b1	8 ft 2 in
Overall height	h17	10 ft 2 in
Overall cab width	b4	3 ft 2 in
Ground clearance	m4	1 ft 3 in
Wheelbase	y	10 ft 8 in
Tilt-up angle	a4	12 °
Tilt-down angle	a5	110 °
Turret rotation (Max.)		360 °
Overall weight		48061 lb
Forks length / width / section	l / e / s	47 in x 4 in x 2 in
Wheels		
Standard tyres		445/65 R22,5
Drive wheels (front / rear)		2 / 2
Steering mode		2 wheel steer, 4 wheel steer, Crab mode
Stabilisers		
Stabs Type		Telescopic Duplex
Controls with stabs		Stabs Commands Individual or Simultaneous
Engine		
Engine brand		Yanmar
Engine norm		Stage V / Tier 4
Engine model		4TN107FTT-6SMU1
I.C. Engine power rating / Power (kW)		173 Hp / 127 kW
Max. torque / Engine rotation (min)		594 ft/lbs @ 1500 rpm
Number of cylinders - Capacity of cylinders		4 - 279 in³
Electric circuit		
Number of batteries / Battery		2 x 12 V
Battery starting current		(EN)850 A
Engine/Battery		
Battery capacity		120 Ah
Transmission		
Transmission type		Hydrostatic with Speedshift
Gearbox / Number of gears (forward) / Number of gears (reverse)		Speedshift 2 / 2
Max. travel speed		25 mi/h
Drawbar pull (Laden)		9200 daN
Parking brake		Automatic negative parking brake
Service brake		Oil-immersed multi-discs braking on front & rear axles
Performances		
Gradeability (laden / unladen)		32.40 % / 41.40 %
Hydraulics		
Hydraulic pump type		Variable displacement pump
Hydraulic flow		49 US gpm
Hydraulic Pressure		5076 PSI
Tank capacities		
Engine oil		3 US gal
Hydraulic oil		79 US gal
Fuel tank		85 US gal
Diesel Exhaust fluid (AdBlue® type)		6 US gal
Noise and vibration		
Noise at driving position (LpA)		67 dB
Environmental noise (LwA)		108 dB
Vibration to whole hand/arm		< 2.50 m/s²
Miscellaneous		
Steering wheels (front / rear)		2 / 2
Controls		2 Joysticks
Safety cab homologation		Cabin ROPS - FOPS Level 2
Attachment recognition system (E-Reco)		Standard

MRT 3060 - Dimensional drawing

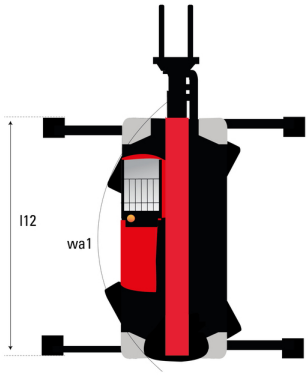

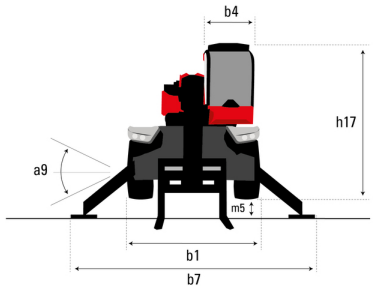

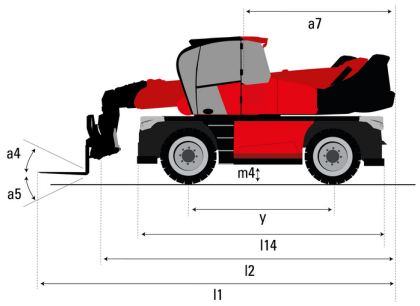

Other data		Imperial
Length of frame	l14	19 ft 5 in
Wheelbase	y	10 ft 8 in
Ground clearance	m4	1 ft 3 in
Counterweight offset (turret at 90°)	a7	11 ft 4 in
Tilt-up angle	a4	12 °
Tilt-down angle	a5	110 °
Overall length at stabilisers	l12	18 ft 5 in
External turning radius (over tyres)	Wa1	15 ft 2 in
Overall width with stabilisers extended	b7	19 ft 11 in
Overall height	h17	10 ft 2 in
Frame levelling corrector	a9	+/- 7 °
Ground clearance under front tires on stabilizers	m5	1 ft 6 in

MRT 3060 - Load chart

Machine on tyres with forks Imperial

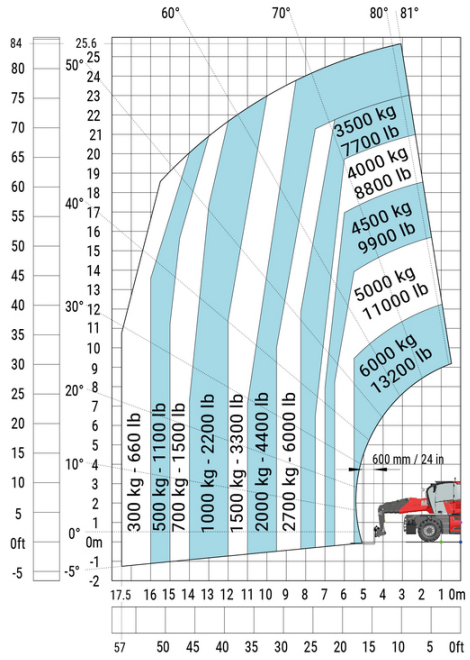

Machine on lowered stabilisers with forks (CAF) Imperial

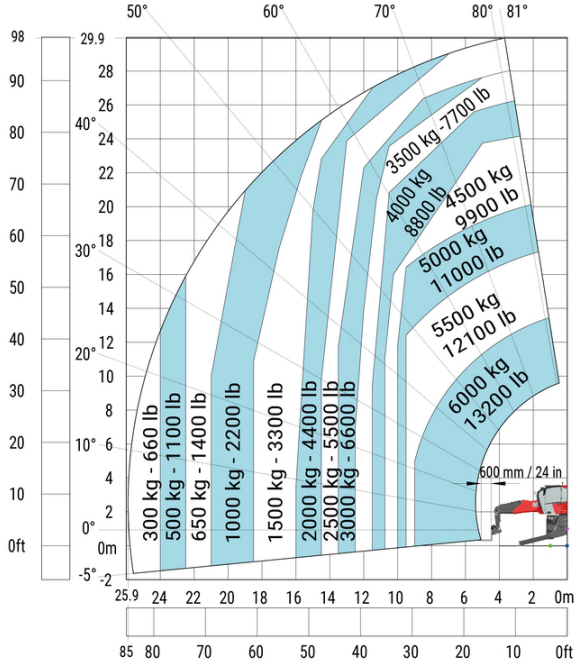

Machine on lowered stabilisers with winch 6000 kg (Imperial)

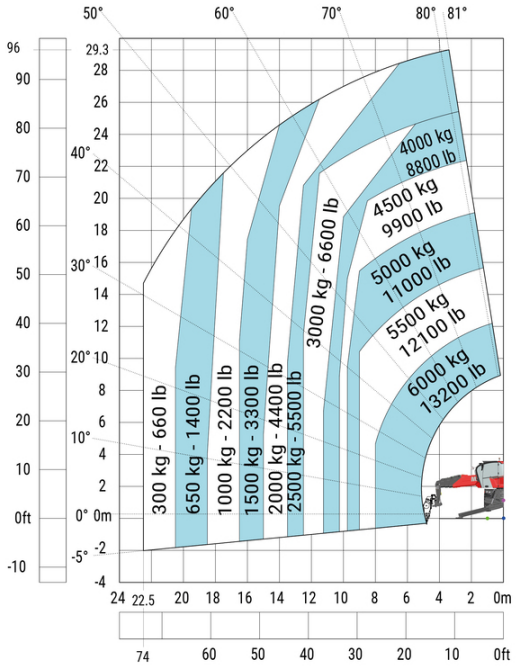

Machine on lowered stabilisers with 600 kg jib (Imperial)

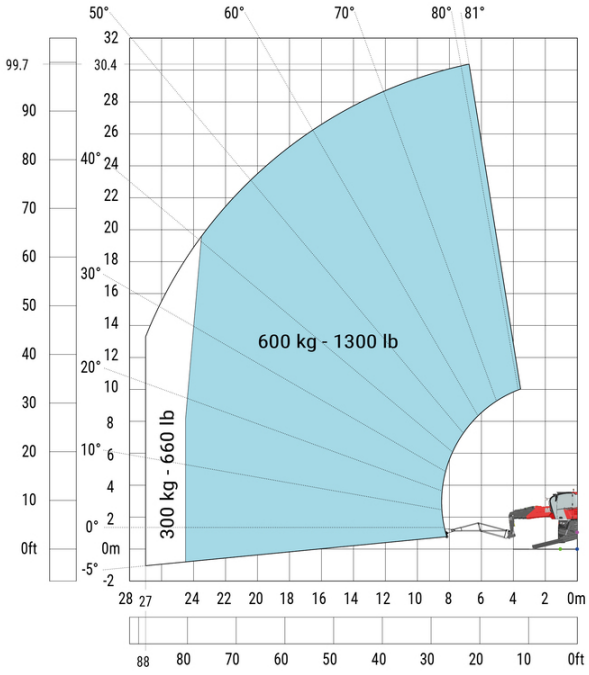

Machine on lowered stabilisers with 6000 kg jib (Imperial)

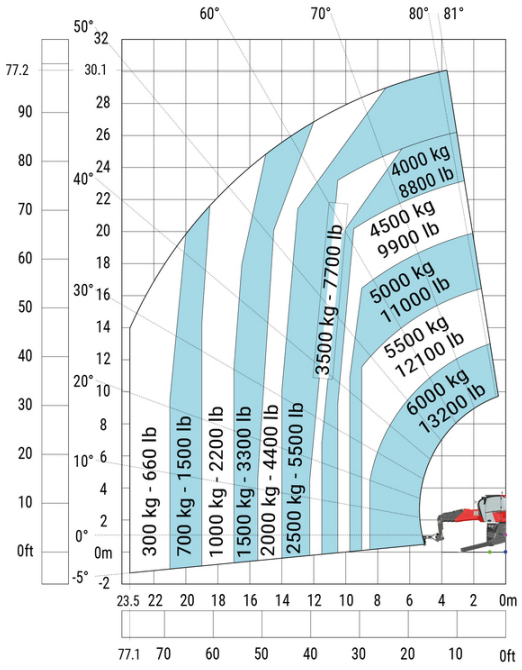

Machine on lowered stabilisers with 2000 kg jib with winch (Imperial)

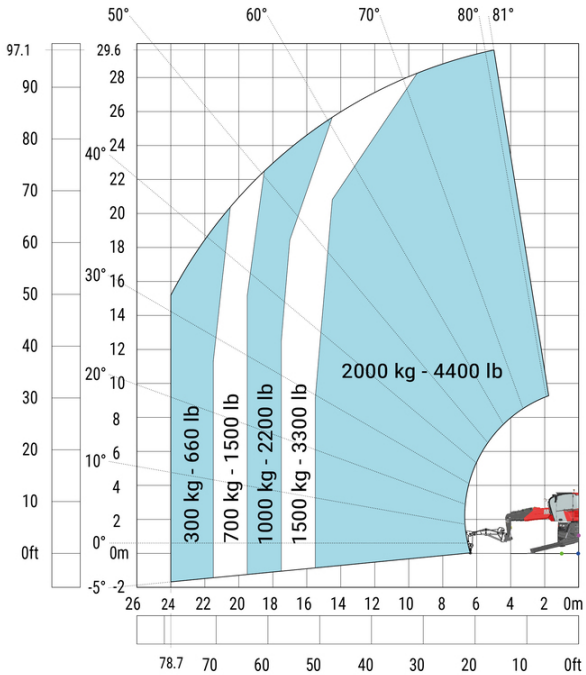

Machine on lowered stabilisers with 365 kg platform Imperial

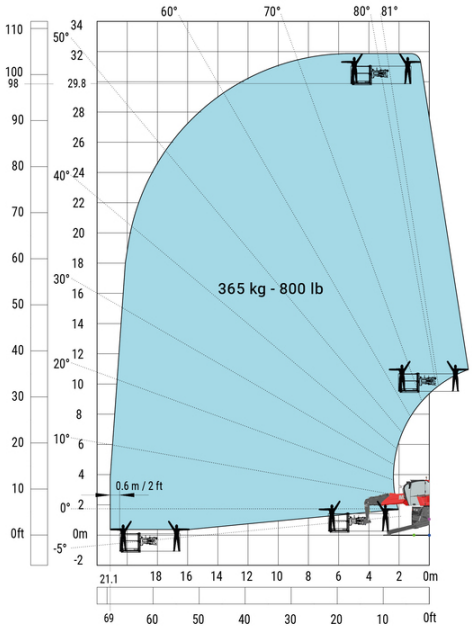

Machine on lowered stabilisers with 1000 kg platform Imperial

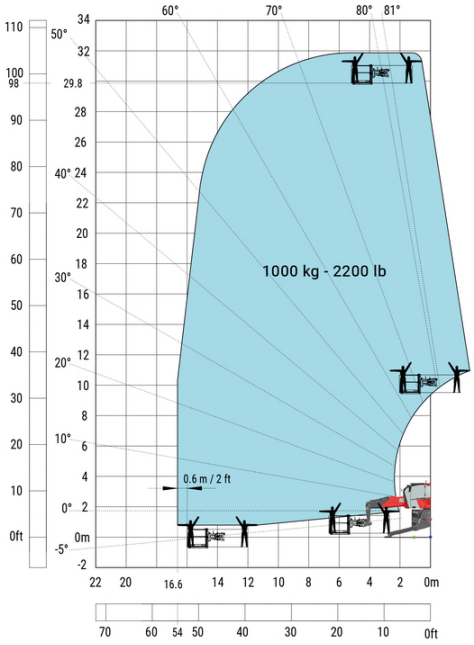

Head Office
B.P. 249 - 430 rue de l'Aubinière
44150 Ancenis Cedex - France
Tel: +33 (0)2 40 09 10 11 - Fax: +33 (0)2 40 09 10 97
www.manitou.com

This publication provides a description of the configuration versions and options for Manitou products, which may differ for equipment. The equipment presented in this brochure may be part of a series, as an option, or it may not be available, depending on the versions. Manitou reserves the right, at any time and without notice, to amend the specifications described and represented. The specifications provided do not bind the manufacturer. For more details, please contact your Manitou agent. This is not a contractually binding document. The presentation of the products is not contractually binding. List of specifications non-exhaustive. The logos as well as the visual identity of the company are owned by Manitou and cannot be used without authorisation. All rights reserved. The photos and diagrams contained in this brochure are only provided for consultation and information purposes.
MANITOU BF SA - Limited company with board of directors - Share capital: 39,668,399 euros - 857 802 508 RCS Nantes